CBRNIAC Newsletter

Chemical, Biological, Radiological & Nuclear Defense Information Analysis Center

Volume 11 Number 2
2010

Students Drive Training Procedures for the Hazard Assessment and Response Management (HARM) Course

Anniston Tests New Equipment for Pueblo Project

PD-TESS Brings Test Ranges Into 21st Century

A U.S. Department of Defense Information Analysis Center sponsored by the Defense Technical Information Center
Approved for Public Release; Distribution Unlimited

Look for these CBRN Defense Information Resources on the CBRNIAC Web site!

CBRNIAC
Chemical, Biological, Radiological & Nuclear Defense Information Analysis Center

Login | Forgot Password? | Contact Us | Site Map | Cart | FAQ

Search

Home | About CBRNIAC | Products & Services | Technical Area Tasks

Upcoming Events

42nd Annual National Conference on Radiation Control
Apr 19-22
Newport, RI

Epidemic Intelligence Service (EIS) Conference
Apr 19-23
Atlanta, GA

NIST IT Security Day
Apr 20
Gaithersburg, MD

The CBRNIAC Newsletter

A Department of Defense Information Analysis Center
The Premier Resource for Authoritative CBRN Defense a
Homeland Security Scientific and Technical Information

About CBRNIAC
- Site Map
- Mission
- Scope
- Core FAQ
- Information Resources

Products and Services
- Ask a question and get up to 4 hours of free Inquiry Service support.
- Shop for Products onlin
- Become a Subject Matter Expert

Technical A
- Expand
- TAT FAQ
- TAT Proc
- Initiate a

CBRNIAC
1204 Technology Drive
Phone: 410-676-9030

DDRE

CBRNIAC
Chemical, Biological, Radiological & Nuclear Defense Information Analysis Center

Home | About CBRNIAC | Products & Services | Technical Area Tasks

Home > About CBRNIAC

- Functions
- Scope
- Information Resources
- Satellite Locations
- Site Map
- FAQ
- User Survey
- 508 Compliance
- Privacy & Security Notice
- Contact Us

About CBRNIAC

Print this Page

The Chemical, Biological, Radiological and Nuclear Defense Information Analysis Center (CBRNIAC), formerly known as the CBIAC, is a full service Department of Defense (DoD) Information Analysis Center (IAC). The CBRNIAC is the authoritative resource for DoD Chemical, Biological, Radiological and Nuclear (CBRN) Defense and Homeland Security scientific and technical (S&T) information.

CBRNIAC is

- Operated under contract to the Office of the Secretary of Defense; Contract No. SP0700-00-D-3180
- Managed by the Defense Technical Information Center (DTIC) under the DoD IAC Program Office
- Operated by Battelle Memorial Institute and supported by Horne International, Innovative Emergency Management, Inc., MTS Technologies, Inc., QuickSilver Analytics, Inc. and SciTech, Inc.

The **CBRNIAC Core Program** acquires, processes, generates, synthesizes and disseminates authoritative CBRN Defense and Homeland Security information.

CBRNIAC
Chemical, Biological, Radiological & Nuclear Defense Information Analysis Center

Login | Forgot

Search

Home | About CBRNIAC | Products & Services | Technical Area Tasks

Home > Technical Area Tasks

- What's New?
- Initiate a TAT
- TAT Clients
- TAT Eligibility
- TAT FAQ
- TAT Process
- Initiate Subscription Account

Technical Area Tasks

Print this Page

Technical Area Tasks (TATs) provide a pre-competed, convenient and responsive task-order contract vehicle for life-cycle coverage from basic research through fielding TATs can include:

- Studies and Analyses
- Hardware Development
- Technical Consulting
- Training Courses
- Information Collection and Compilation
- Design and Development of Models, Simulations, and Databases
- Support of Conferences, Symposia, Working Groups
- Test and Evaluation of Materials, Components, and Systems
- Laboratory Studies (including Surety work)
- Engineering Design, Prototyping, and Low-rate Production

For more information on TATs, contact Janice Rhodes at cbrniac-tat@battelle.org.

More than a just a deliverables-based contract vehicle!

TATs provide valuable analysis and Research and Development (R&D) solutions to tough chemical, biological, radiological, and nuclear (CBRN) defense and homeland security problems. TATs create new Scientific and Technical Information (STI) which is readily accessible to the CBRN Defense community. This saves federal resources by encouraging the re-use of STI.

CBRNIAC
Chemical, Biological, Radiological & Nuclear Defense Information Analysis Center

Login | Forgot Password?

Search

Home | About CBRNIAC | Products & Services | Technical Area Tasks

Home > Products & Services

- Calendar of Events
- CBRNIAC Special Collection
- CBRNIAC Newsletter
  - Newsletter Archive
  - Submission Guidelines
  - Advertise
  - Advertising Form
  - Join the Mailing List
  - Disclosure Form
- Inquiry Services
- Subject Matter Experts
- Product Catalog
- CBRN Links
  - CBRN Website Directory
  - Journal Literature
  - Key Online Documents
  - RSS Feeds
  - CBRN Headline Services
  - Biodefense Presentations
  - Patent Search

Products & Services

Print this Page

CBRNIAC Information Products

- DTIC Total Electronic Migration (TEMS) - search DTIC's TEMS (DTIC registration required)
- CBRNIAC Product Catalog – A variety of CBRN-relevant hardcopy and multimedia products.
- CBRN Links - a collection of links to CBRN-related internet resources.
- Calendar of Events – Up-to-date information on relevant conferences, symposia, meetings, and workshops.
- CBRNIAC Newsletter – Quarterly CBRNIAC publication highlighting a variety of topics and stories relevant to the CBRN community.

CBRNIAC Services

- Inquiry Services – take advantage of 4 free hours of research from the CBRNIAC staff.
- Subject Matter Experts - Chemical, Biological, Radiological and Nuclear (CBRN) Defense and Homeland Security professionals who have volunteered to support the CBRNIAC mission.
- Technical Area Tasks – address more difficult technical issues by initiating a project with the CBRNIAC.

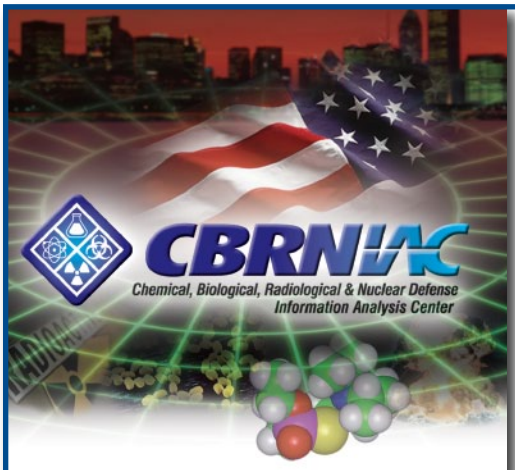

The **Chemical, Biological, Radiological and Nuclear Defense Information Analysis Center (CBRNIAC)** is a Department of Defense (DoD)-sponsored Information Analysis Center (IAC) operated by Battelle Memorial Institute and supported by Horne International, Innovative Emergency Management, Inc., MTS Technologies, Inc., QuickSilver Analytics, Inc., and SciTech, Inc., and administered by the Defense Technical Information Center (DTIC) under the DoD IAC Program Office (Contract No. SP0700-00-D-3180).

The CBRNIAC Contracting Officer's Technical Representative (COTR) may be contacted at the following address:

CDR USA RDECOM
Edgewood Chemical Biological Center
ATTN: AMSRD-ECB-AP-T (CBRNIAC COTR)
5183 Blackhawk Road
Aberdeen Proving Ground, MD 21010-5424

U.S. Government agencies and private industry under contract to the U.S. Government can contact the CBRNIAC for information products and services. CBRNIAC services also extend to all state and local governments and the first responder community, to include local emergency planners, firefighters, medics and law enforcement personnel.

For further information or assistance, visit or contact the CBRNIAC.

CBRNIAC
1204 Technology Drive
Aberdeen, MD 21001-1228
410.676.9030 (phone) 614.458.0300 (fax)

General Information & Core Program:
cbrniac@battelle.org

Technical Area Task Program:
cbrniac-tat@battelle.org

Knowledge Management & Development Program:
cbrniac-kmd@battelle.org

http://www.cbrniac.apgea.army.mil/

Table of Contents

Volume 11 Number 2 2010

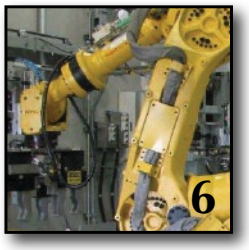

4 Students Drive Training Procedures for the Hazard Assessment and Response Management (HARM) Course

6 Anniston Tests New Equipment for Pueblo Project

8 Contract Awards

9 PD-TESS Brings Test Ranges Into 21st Century

11 MRICD Microscopist Elected to Fellowship in Professional Society

12 Calendar of Events

14 In the News

15 DoDTechipedia

16 New CBRNIAC Information Resources

17 Real-World Anthrax Scare Proves Readiness

18 History of Army Chemical and Biological Decontamination—Part VIII

21 CBRNIAC Hosts Technical Forum on Bioforensics Resources and Repositories

On the Cover: Emergency Responders attending the Hazard Assessment and Response Management (HARM) course decontaminate response personnel after leaving a contaminated building during a training exercise.

The ***CBRNIAC Newsletter***, a quarterly publication of the CBRNIAC, is a public release, unlimited distribution forum for chemical, biological, radiological and nuclear defense information. It is distributed in hardcopy format and posted in Portable Document Format (PDF) on the CBRNIAC Homepage.

The CBRNIAC welcomes unsolicited articles on topics that fall within its mission scope. All articles submitted for publication consideration must be cleared for public release prior to submission. The CBRNIAC reserves the right to reject or edit submissions. For each issue, articles must be received by the following dates:

- First Quarter (Number 1) – October 15th
- Second Quarter (Number 2) – January 15th
- Third Quarter (Number 3) – April 15th
- Fourth Quarter (Number 4) – July 15th

All paid advertisements and articles are subject to the review and approval of the CBRNIAC COTR prior to publication. The appearance of an advertisement, announcement, or article in the ***CBRNIAC Newsletter*** does not constitute endorsement by the DoD or the CBRNIAC.

Students Drive Training Procedures for the Hazard Assessment and Response Management (HARM) Course

by Shannon Arledge, Center for Domestic Preparedness Public Affairs

Note: As the citizens of Haiti have witnessed first-hand the horrific effects of a devastating earthquake, countries throughout the world united a response effort to assist Haiti in recovering from this major disaster. As flooding and other natural disasters affect the United States and terrorists committed to destruction continue to plague the world, emergency personnel continue to train for whatever may require their response. Courses provided at the Center for Domestic Preparedness (CDP) focus on response and recovery and prepare emergency response providers for both small- and large-scale disasters. The training is cost-free for state, local, and tribal response personnel.

Hands-on training that provides both mental and physical challenges to emergency responders is difficult to duplicate. Few training courses require students to demonstrate solid response skills, while providing parameters and developing plans for a hazardous materials or weapons of mass destruction (WMD) response.

The Hazard Assessment and Response Management (HARM) course is the first course of its kind at the Center for Domestic Preparedness (CDP), located in Anniston, Alabama. The HARM course provides response personnel with a scenario, but the students determine the tempo and plan their response.

"All CDP courses have instructors directly involved with training," explained Rick Dickson, assistant director of training delivery. "In HARM our instructors step back, let the students make the decisions. Sometimes the students meet with difficulty; other times they succeed immediately; ultimately, the information and learning tools they gain are invaluable," he added. "This course is about as real as it gets for WMD or hazardous materials training."

Course prerequisites include ICS 100 and 200, as well as successful completion of one of the following CDP courses in the previous 36 months: WMD Technical Emergency Response Training, WMD HazMat Technician, or WMD Hands-On Training (8 or 16 Hour).

The goal of the HARM course is to provide the responders with a realistic operational WMD environment in which the students operate within the incident command system and decide procedures, equipment, and tactical approach to an emergency event.

"We were forced to work in a unified command," said Sue McManus, Memphis, Tennessee, Fire Department. "If we had a real incident, we would work with multiple agencies and jurisdictions," she added. "Most agencies do not practice like this, and [they] should. Any real event will be similar to this experience."

This three-day course consists of up to 45 responders from multiple disciplines and multiple jurisdictions, with different levels of training and experience. The students appoint their incident commander and determine response elements based on the number of students and response background of each person.

An emergency responder attending the HARM course samples response personnel for traces of contamination after leaving a decontamination line.

Day One

The teams choose their equipment, determine their level of competency, and conduct individual and collective refresher training in preparation for their mission.

"This was a great learning event," said LeLand Hopkins, Memphis, Tennessee, Fire Department. "There were students who knew more than others, but that worked to our advantage," he added. "Some people's strengths can plug holes in other's weaknesses. Today was an excellent blend."

Continued pg. 5

Day Two

The response element must conduct life safety actions, determine the toxicity within the complex, mitigate the threat, and identify and contain any toxic spills.

"We came here with general knowledge from previous courses," said James Johnson, Arlington, Virginia, hazardous materials technician. "We had to put into play what we have learned, both here at the CDP and from our technical knowledge based on our occupation," he stressed. "We were able to demonstrate our competency and show we could respond to a disastrous event."

Day Three

The teams mitigate and contain CBRNE material consisting of nerve agents. The HARM course incorporates the CDP's toxic agent facility that allows for hands-on training using actual nerve agents.

"This was a great training experience," said Hector Cintron, Portsmouth, Virginia, U.S. Coast Guard. "I'm better prepared. You never know when you'll be in a hazardous situation and possibly required to collect evidence or work on a decontamination line. This course has increased my versatility."

"The final day of training allows the students to continue mitigation and hazardous materials containment at our toxic agent facility," said Dickson. "These responders have a familiarity from previous nerve agent training, but today they make entry into a toxic agent environment, locate the threat using the tools they have chosen, and render the location safe. All the while our instructors maintain a comfortable distance, note observations, provide critical feedback, and ensure the student responders operate safely."

CDP courses range from one to five days in length and feature interdisciplinary resident and nonresident training courses that promote greater understanding among 10 diverse responder disciplines: Emergency Management, Emergency Medical Services, Fire Service, Governmental Administrative, Hazardous Materials, Healthcare, Law Enforcement, Public Health, Public Safety Communications, and Public Works.

The CDP is a component of the Federal Emergency Management Agency's (FEMA's) National Preparedness Directorate in the Department of Homeland Security (DHS). The Anniston training center is the nation's only federally chartered Weapons of Mass Destruction (WMD) training facility for civilian responders.

Learn more about the CDP at http://cdp.dhs.gov.

FEMA's mission is to support its citizens and first responders to ensure that as a nation we work together to build, sustain, and improve our capability to prepare for, protect against, respond to, recover from, and mitigate all hazards.

Center for Domestic Preparedness

In June 1998, the Center for Domestic Preparedness (CDP) opened its doors as a training center for the nation's emergency responders. The CDP's mission is to operate a federal training center for delivery of high-quality, comprehensive preparedness training programs for the nation's emergency responders.

The CDP's interdisciplinary resident and nonresident training courses promote greater understanding among the following diverse responder disciplines: Emergency Management, Emergency Medical Services, Fire Service, Governmental Administrative, Hazardous Materials, Healthcare, Law Enforcement, Public Health, Public Safety Communications, and Public Works.

At the **C**hemical, **O**rdnance, **B**iological and **RA**diological **T**raining **F**acility (COBRATF), the CDP offers the only program in the nation featuring civilian training exercises in a true toxic environment, using chemical agents. The advanced, hands-on training enables responders to effectively respond to real-world incidents involving chemical, biological, explosive, radiological, or other hazardous materials. Responders serve as the nation's first line of defense and deserve the highest-quality training available.

On March 31, 2007, the **N**oble **T**raining **F**acility (NTF) was integrated into the CDP training center. In 1999, the former Noble Army Hospital was converted into a training site for health and medical education in disasters, to include both acts of terrorism and manmade disasters. The NTF is the only hospital facility in the United States dedicated to training hospital and healthcare professionals in disaster preparedness and response.

To get the "FAQ" about training, go to:
http://cdp.dhs.gov/faq/index.html

Learn more about the Center for Domestic Preparedness
1.866.213.9553 or http://cdhs.gov

Anniston Tests New Equipment For Pueblo Project

Michael B. Abrams, U.S. Army Chemical Materials Agency

A new operation here [at Anniston Army Depot in Anniston, Alabama] is expected to have a big impact on future chemical munition disposal operations in Pueblo, Colorado.

Linear Projectile Mortar Disassembly (LPMD) System

Monday, [March 22, 2010] Anniston Chemical Activity (ANCA) employees started delivering mustard-filled 4.2-inch mortars to a building on Anniston Army Depot laid out to resemble an area of the Pueblo Chemical Agent-Destruction Pilot Plant (PCAPP) under construction at Pueblo Chemical Depot, Pueblo, Colorado. At the Anniston building, a team of specially trained Anniston Chemical Agent Disposal Facility (ANCDF) employees started using the Linear Projectile Mortar Disassembly (LPMD) machine Tuesday (March 23, 2010) to remove explosives (fuzes and bursters) from the munitions ANCA is delivering to them.

The Anniston-based employees will collect LPMD reliability and maintenance data associated with the removal of the explosives over the course of several months. The data collected in Anniston will be analyzed and used by Pueblo-based counterparts to safely demilitarize the chemical munitions stockpile in Colorado.

"We can do this important job to help our sister site in Colorado while also conducting safe operations at the ANCDF. But it is also important to know the LPMD project does not involve the transportation of any mustard-filled munitions to or from either the Alabama site or the Colorado site," said Timothy K. Garrett, ANCDF government site project manager.

He also said, "Since the Anniston mustard-filled munitions are similar to the Pueblo stockpile, the lessons learned here will be instrumental in helping the Colorado team prepare for future safe disposal operations at Pueblo Chemical Depot."

ANCA employees are now moving mustard-filled munitions from storage igloos to the ANCDF and to the LPMD building in support of operations at both facilities. They use large, vault-like containers to safely and securely move the munitions. To date, ANCA's Army civilian employees have made more than 8,500 safe deliveries using the containers since the first trip to the ANCDF in August 2003.

Lt. Col. Andrew M. Herbst, ANCA commander, said, "I'm excited to see the LPMD project under way. ANCA employees are eager to approach this project as an opportunity to assist our sister site, Pueblo Chemical Depot, in preparing for the start of their own munition disposal campaign."

While ANCA employees are responsible for storing and moving chemical munitions at Anniston Army Depot, Westinghouse Anniston contractor employees are operating the ANCDF and the new LPMD. Steve Bragg is the LPMD Project Manager. He said, "A large number of people have worked very hard to begin operations at the LPMD, and I am very thankful for their efforts. We have worked as a team to begin safe, compliant operations."

Continued pg. 7

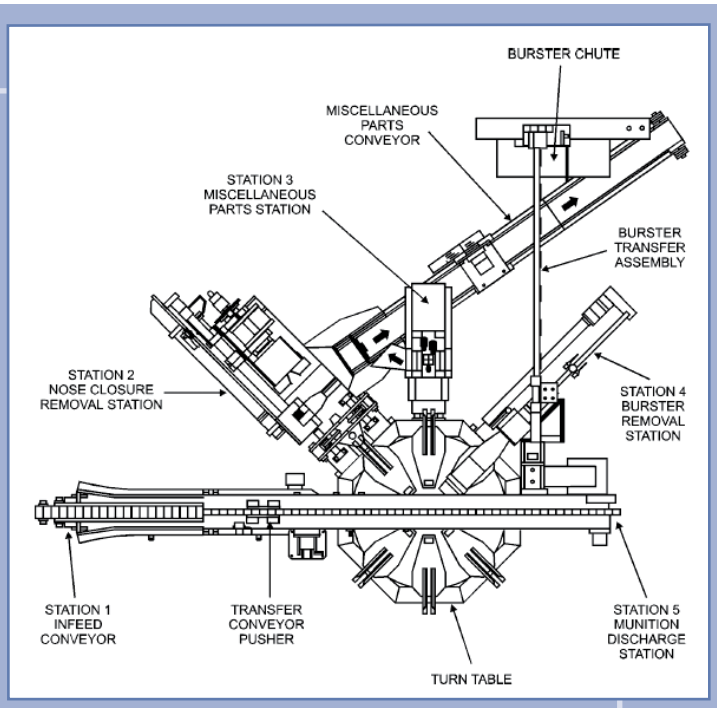

Projectile Mortar Disassembly (PMD) System used at ANCDF

A key component of the LPMD is a yellow, six-axis robot that is remotely operated by Bragg's team from a nearby control room. After other employees carefully place mustard munitions on a conveyor system, the robotic machine picks up the munitions one at a time and places them at munition handling stations like those used in the older PMDs. The use of the robotic LPMD, rather than older, flat, rotary tables, is expected to improve PCAPP operations. Locally, the explosives removed by the Alabama crew will be destroyed on Anniston Army Depot at a later date. The munitions, on the other hand, will be repackaged and returned to safe ANCA storage igloos for future disposal at the ANCDF.

Anniston LPMD operations are expected to remove the munition's energetic components, including the fuze and burster, from thousands of 4.2-inch mortars and 105mm and 155mm artillery shells during the next several months. The project does not involve the draining of any mustard agent. This week, only a relatively few mortars have been processed as local managers have scheduled a slow and deliberate ramp-up of operations to ensure safe operations.

Since disposal operations began at the ANCDF in August 2003, more than 467,700 nerve agent and mustard-filled munitions (70.6 percent) have been safely demilitarized. More than 346,000 gallons (68.7 percent) of liquid nerve and mustard agents have also been processed during operations at the ANCDF.

This News Release was published March 25, 2010. For the ANCDF weekly update, visit http://www.cma.army.mil/anniston.aspx and look for "What's New."

The CMA is the world leader in programs to store, treat, and dispose of chemical weapons safely and effectively. For more information, visit http://www.cma.army.mil.

U.S. Army Chemical Materials Agency
CREATING A SAFER TOMORROW

Linear Projectile Mortar Disassembly Machine (LPMD) Reliability and Maintainability Testing

- The Anniston Chemical Agent Disposal Facility (ANCDF) and the other operational demilitarization facilities use a machine that was designed in the 1980's called a Projectile Mortar Disassembly (PMD) machine to remove the fuzes and bursters from mustard munitions. A diagram of the PMD is shown in to the left.
- The PMD is a custom-built machine. Spare parts for the machine are only available from one vendor. Most of the spare parts are custom built.
- Problems associated with obtaining spare parts for the PMD, and with maintaining and repairing the PMD, have been identified through the years.
- Lessons learned from operating the PMD system have been incorporated into a new machine design, the ***Linear Projectile Mortar Disassembly*** (LPMD) machine. The LPMD will be used to disassemble the mustard munitions stored at Pueblo Chemical Depot, Colorado. The types of mustard munitions stored in Colorado are the same as those stored by the Anniston Chemical Activity at Anniston Army Depot.
- A working LPMD system has been installed near the ANCDF for the purpose of obtaining ***reliability and maintainability*** data from the disassembly of mustard munitions (pictured on page 7). The reason for this effort is to improve the LPMD operability prior to using the system at the Pueblo Chemical Agent-Destruction Pilot Plant (PCAPP) while safely demilitarizing the Colorado chemical munition stockpile.
- The lessons learned from operating the LPMD at ANCDF are expected to result in improved operations in Colorado. The improved operations are expected to result in an overall program cost savings.
- The LPMD had gone through the entire hazardous waste permitting process as required by the Alabama Department of Environmental Management. The LPMD has been granted an operating permit. Anniston LPMD operations do not involve the draining of any mustard agent.
- Operation of the LPMD at the ANCDF began March 23, 2010.

Contract Awards

Cleanup of Military Munitions and Explosives at the National Training Center (NTC), Fort Irwin, CA
Versar, Inc
Springfield, VA
$29,500,000 April 1, 2010
By U.S. Army Corps of Engineers, Los Angeles District, CA

Phase 2 Chemical Agent Munitions Disposal Systems (CAMDS) Closure, CAMDS & Deseret Chemical Depot Secondary Waste And GA/Lewisite Disposal
EG&G Defense Materials, Inc.
Tooele, UT
$181,291,800 March 26, 2010
By U.S. Army CMD-Rock Island Contracting Center, Rock Island, IL

Developing a Proof-of-Concept Platform Capable of Yielding a Purified Vaccine Candidate Using a Whole Plant-Based Process
Kentucky Bioprocessing, LLC
Owensboro, KY
$17,900,500 March 18, 2010
By Defense Advanced Research Projects Agency, Arlington, VA

Influenza Vaccine Packages
Medimmune Vaccines, Inc.
Gaithersburg, MD
$32,293,397 March 11, 2010
By Defense Supply Center Philadelphia, Philadelphia, PA

Creation of Center of Excellence for Emerging and Zoonotic Animal Diseases
K-State
Manhattan, KS
$12,000,000 March 10, 2010
By Department of Homeland Security, Washington, DC

Develop Drugs Against Botulinum Neurotoxins
Brookhaven National Laboratory
Upton, NY
Stony Brook University's Institute of Chemical Biology and Drug Discovery
Stony Brook, NY
$1,400,000 March 8, 2010
By Defense Threat Reduction Agency, Fort Belvoir, VA

Indefinite-Delivery/Indefinite-Quantity Acquisition Program and Engineering Support, Research and Technology, and Program and Integration Support
Teledyne Brown Engineering, Inc.
Huntsville, AL
(Nine Other Winners With Teledyne)
$485,000,000 March 5, 2010
By U.S. Army Edgewood Chemical Biological Center, Aberdeen Proving Ground, MD

Provide Business and Analytical Support to the Joint Program Executive Office for Chemical and Biological Defense (JPEO-CBD) Systems
Kalman & Co., Inc.
Virginia Beach, VA
$6,624,698 March 5, 2010
By Marine Corps System Command, Quantico, MD

Portable Mass Spectrometer
1st Detect Corporation
Austin, TX
$1,800,000 March 3, 2010
By Texas Emerging Technology Fund, TX

Develop a Simple, Quick Blood Test to Measure Radiation Exposure After an Act of Terrorism or Nuclear Accident
University of Rochester Medical Center
Rochester, NY
$3,900,000 March 02, 2010
By Biomedical Advanced Research and Development Authority, Washington, DC

On-Dock Rail Nuclear Detectors
Raytheon Company
Tewksbury, MA
$4,300,000 January 26, 2010
By Department of Homeland Security, Washington, DC

CBRNIAC
Chemical, Biological, Radiological & Nuclear Defense Information Analysis Center

Serving the CBRN Defense and Homeland Security communities

PD-TESS Brings Test Ranges Into 21st Century

By Al Vogel, Public Affairs Specialist, U.S. Army Dugway Proving Ground, Utah

In 2015, West Desert Test Center (WDTC) will begin operating an outdoor chemical and biological defense testing grid that will be unique in the nation, perhaps the world.

The Department of Defense (DoD) is upgrading Target R, Target S, and Tower grids with its first comprehensive, fully instrumented and networked capability to test chem/bio defense equipment.

Efforts to ascertain how much money has been currently allocated, and the expected final cost, were unsuccessful. However, it is accurate to say that the test grid upgrade involves tens of millions of dollars.

The test grid upgrade, when completed in 2015, will heighten WDTC as the place to go for the testing of defenses against chemical and biological warfare agents.

Tower Grid, seen here, and Target R and S grids will receive the new test grid update, costing tens of millions of dollars. Photo by Al Vogel.

Most chem/bio defense equipment is created by private businesses, for use by military, environmental, fire, police and investigative agencies. But before it's adopted, the equipment must be tested to ensure it functions accurately and unfailingly.

Enter Dugway Proving Ground (DPG), Utah, and the WDTC. Created in 1942 as a U.S. Army chem/bio testing facility, Dugway is under the command of U.S. Army Development Test Command at Aberdeen Proving Ground, Maryland. In turn, WDTC is under the command of U.S. Army Test and Evaluation Command at Arlington, Virginia.

The test center plans and conducts independent tests to high standards, gathering information on customers' systems for use by military and civilian agencies. Outdoor testing of chem/bio defense systems is crucial, but international treaties forbid the use of actual chem/bio agents outdoors. Simulants—benign substances with the same characteristics as the actual agent—have been used for decades and meet state and international approval.

The upgrade of the grids is overseen by the DoD's Joint Program Executive Office for Chemical and Biological Defense, and the Joint Project Manager for Nuclear, Biological and Chemical Contamination Avoidance. These offices tasked the Product Director for Test Equipment, Strategy and Support (PD-TESS) to develop the new, innovative grids.

WDTC, PD-TESS and Lockheed Martin's Test Grid Contractor Team have designed the outdoor chem/bio grid to not only meet customer needs, but to make testing more efficient. The project is referred to as the PD-TESS Grid.

The Lockheed Martin team consists of:

- ITT Industries, Inc., of White Plains, New York, as its lead system integrator.
- EMC Corp., specializing in information infrastructure, headquartered in Hopkinton, Massachusetts.
- Midwest Research Institute of Kansas City, Missouri, an international center for applied research and technology development.
- Micro Engineering, Software and Hardware (MESH Inc.) of Oxford, Pennsylvania.
- Physical Sciences Inc. of Boston, Massachusetts, a technical research and development corporation.
- National Center for Atmospheric Research, of Boulder, Colorado, a non-profit consortium of more than 100 North American university members and affiliates.
- HHI Construction & Engineering of Farmington, Utah.

To ensure data accuracy, each test is accompanied—refereed—by WDTC instrumentation known to be accurate. This provides a reliable baseline against which to compare data generated by customer equipment being tested.

Continued pg. 10

Presently, commercial chem/bio instruments are being tested to determine which will best referee the tests, especially under Dugway's varying conditions: dust, temperature extremes (as much as 65 degrees in one day), humidity, rain, snow and high winds.

It's all done to answer the big question: Is the customer's item reliable and accurate?

The basics of testing chem/bio defense equipment have changed little from when the outdoor test grids were created 60-plus years ago: Instruments are set up in the field. A cloud of simulant is disseminated from one or multiple locations. Instruments detect, track, and measure the concentration of the cloud, which is usually invisible to the naked eye. Customer systems are tested alongside the referee instruments.

As currently conducted, outdoor chem/bio testing is accurate, but laborious and time consuming: Instrumentation is brought to the grid for each test and operated at the instruments' location. Some may be operated remotely. Data is downloaded from individual instruments after each test. Customers must be on the grid to view each trial and may wait days or weeks for the processed data from the test.

While the current system generates accurate data, the PD-TESS grid will make testing more efficient and get data out quicker. This will speed the delivery of chem/bio defense equipment to Warfighters and specialized civilians.

Through the PD-TESS Grid, customers and operators will view test data in near realtime, combined into one display, via wireless transmission. To prevent espionage, sabotage or unauthorized reception, the wireless data will be sent secure and encrypted.

The new grid system also places instrument operators in a central location, remotely controlling and monitoring their equipment, instead of around the test grid at various locations.

Customers need not be at the test site to view the data. Via a wireless network, they can watch each trial in comfort from the Ditto Area, site of WDTC headquarters, miles from the test grid. At the end of each day, customers could receive the processed data from each trial.

The PD-TESS grid depends upon "Truth Boxes," moveable grids of a specific size, created by transportable towers set in a precise pattern. This precision means accurate repeatability, even decades later. Upon or near these towers are the referee and meteorology instruments and the customer items to be tested.

The largest Truth Box will be 5x5 kilometers (3.1 miles), and is designated as Low Resolution. Within it is the High Resolution Truth Box, a 1x1-kilometer area with a greater concentration of towers and instruments.

Dee Williamson is overseeing the PD-TESS Grid project locally, as the director of Utah operations for ITT Advanced Engineering and Sciences, headquartered in Alexandria, Virginia.

It is a job that requires meeting with a variety of offices: test instrumentation operators, wireless data experts, data crunchers, construction crews, etc. The goal is to not only create more efficient chem/bio testing grid, but one that is easier to use.

"We're trying to make the system simple to set up and operate," Williamson said. "If it's not simpler than it is now, nobody will use it. We're working with everybody, seeing what equipment they use and how we can help them."

Employees that currently operate test instruments will be trained to use the new grid; no new personnel are anticipated. "We think it can be done with the people that are here," said Williamson.

Millions of dollars are at stake with each test: the dollars spent to develop the test item and the dollars that the manufacturer will receive if his item is approved for purchase. Those dollars may also be translated into jobs, company profits, and reputation.

But more important are the lives at stake. The loss of life, here and abroad, may be great if the test item fails to perform. Little wonder that the DoD is investing heavily in the PD-TESS Grid project.

"Customers come here to test their detectors and systems," Williamson said. "With this new grid we'll be able to say, 'We saw what you saw' or 'We didn't see what you saw.' This way, we can be sure it works before it gets sent off to the Warfighter."

Ultimately, the warning that saved untold lives, abroad or in America, may someday be traced to an innovative test grid in the remote Utah desert, far from the manufacturer whose detector sounded the alarm.

Original article appeared in the January 2010 issue of the DPG DISPATCH.

CBRNIAC
Chemical, Biological, Radiological & Nuclear Defense Information Analysis Center

Your one-stop shop for CBRN Defense scientific and technical information resources

MRICD Microscopist Elected to Fellowship in Professional Society

By Cindy Kronman, MRICD

The Microscopy Society of America Council (MSA) has elected Dr. John P. Petrali of the US Army Medical Research Institute of Chemical Defense (MRICD) to fellowship of the society. According to Dr. David W. Piston, president of MSA, election to fellowship "is intended to recognize distinguished members of the Society who have made significant contributions to the advancement of the science and practice of microscopy imaging, analysis and/or diffraction techniques."

Specifically, Petrali is being recognized "for his pioneering work in ultrastructural pathology, his tireless educational activities, and his outstanding contributions to the Microscopy Society of America and its local affiliates."

Only a small percentage of the society's membership receives the designation "MSA Fellow." While honored by the recognition of his peers, Petrali also finds it humbling.

"It is nice to be recognized for an effort that has always been a labor of love for me," said Petrali.

Founded in 1942 as the Electron Microscopy Society of America, the society focused on teaching and demonstrating the advances of the relatively new science of electron microscopy, to include, says Petrali, "instrumentation, specimen preparation, special staining methods, such as histochemistry and immunocytochemistry, and finalized micrograph documentations." The society dropped electron from its name in 1993 to reflect its inclusion of all kinds of microscopy (light, confocal, atomic force, scanning, etc.).

Petrali became a member of the society in the early 1960's, giving his first presentation as a co-author at the society's annual meeting in 1966 in Philadelphia. At the time, Petrali operated the electron microscope in the Pathology Department of the Army's Biomedical Laboratory, a predecessor lab of MRICD, and recalls that the presentation highlighted the department's successes with immunocytochemistry using the microscope.

Since then, Petrali has been a very active member of the society, both on the national and local levels. On the national level, Petrali has served as a meeting session chair and workshop chair at the society's annual scientific meetings. He also currently serves as chairman of the MSA Certification Board. For the local affiliate, the Chesapeake Society for Microscopy, Petrali has held the offices of vice president and president, and served as a Baltimore council member three times.

During his long career at MRICD, Petrali has conducted many pioneering studies dealing with the ultrastructural pathology and immunopathology of the pathogenesis of chemical warfare agents, and his discoveries have led to the development of specific immunodiagnostic tests and to new treatment regimens following exposure. In addition to his research, Petrali has served as associate

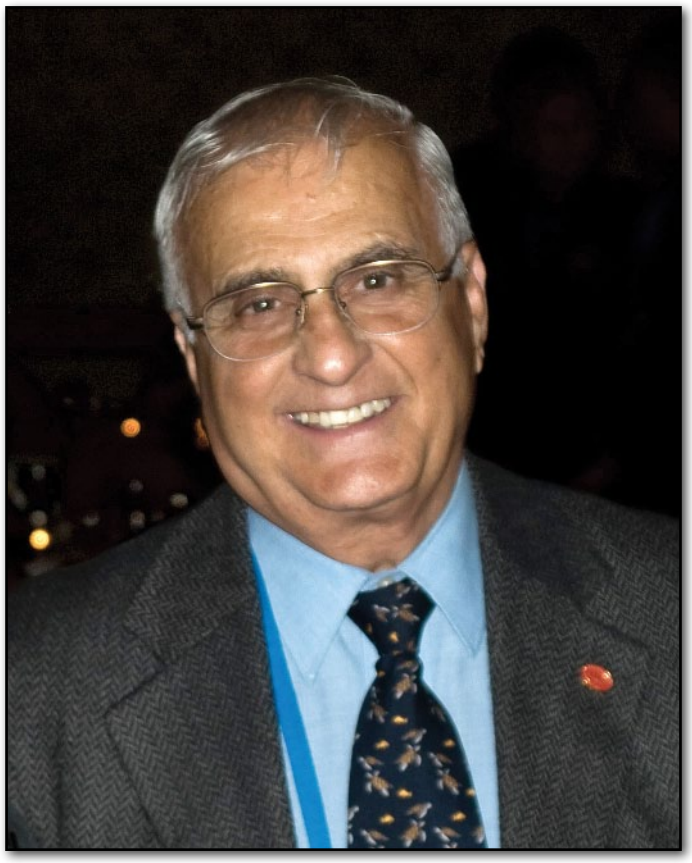

professor in the University of Maryland School of Medicine's departments of anatomy and dermatology, where he has taught courses in the ultrastructural sciences to include ultrastructural pathology, ultrastructural anatomy, cytochemistry, as well as certification courses.

Petrali is the author of, or co-author on, more than 130 peer-reviewed scholarly articles, 8 book chapters, and 31 technical reports, and has presented his research at innumerable scientific and professional meetings. In addition, he has mentored many young scientists in the biomedical disciplines of microscopy who have gone on to successful careers in the medical clinical and laboratory sciences.

MRICD is the nation's leading science and technology laboratory in the area of medical chemical countermeasures research and development. With sophisticated laboratories located at Aberdeen Proving Ground, Maryland, MRICD manages a diversified portfolio of medical chemical warfare agent research projects for the Department of Defense and other Federal agencies.

For more information, visit the MRICD Web site at:

http://chemdef.apgea.army.mil/

Calendar of Events

Do you have a CBRN Defense or Homeland Security course or event to add to our Calendar? Submit the pertinent information via email to **cbrniac@battelle.org.** *The CBRNIAC reserves the right to reject submissions. For a more extensive list of events, view our online calendar at* **https://www.cbrniac.apgea.army.mil/Products/Events/Pages/default.aspx.**

Jun 8–10
DoD's Sixth Annual CBRN Consequence Management Conference
Chantilly, VA
http://www.cmconferences.org/

Jun 8–11
10th International Symposium on Protection Against Chemical and Biological Warfare Agents
Stockholm, Sweden
http://www.cbwsymp.foi.se/

Jun 8–12
TIEMS 2010 Annual Conference
Beijing, China
http://www.tiems2010.org/tiems/index.htm

Jun 13–18
22nd Annual FIRST (Forum of Incident Response and Security Teams) Conference
Miami, FL
http://conference.first.org/About/overview.aspx

Jun 14–17
Public Security S&T Summer Symposium 2010: from Concept to Capability – Enhanced Public Security through Collaborative S&T
Ottawa, Ontario Canada
https://secure.brentmoore.com/ei/images/DND/CRTI%202010/Website/index.htm

Jun 14–17
8th Annual Biodefense Vaccines & Therapeutics
Washington, DC
http://www.infocastinc.com/index.php/conference/biodef10/registration

Jun 14–18
Eurosatory 2010
Paris, France
http://www.eurosatory.com/#/home/

Jun 15–17
Illinois Public Health Emergency Preparedness Summit
Oak Brook, IL
http://www.ipha.com/tabs/events/eventdetails.aspx?EventId=96

Jun 15–17
Special Operations Forces Industry Conference
Tampa, FL
http://eweb.ndia.org/eweb/DynamicPage.aspx?Site=ndia&Webcode=EventList

Jun 16–17
Showcase of Aberdeen Proving Ground Technology and R&D Contract Opportunities
Bel Air, MD
http://www.harford.edu/apgshowcase/

Jun 17–18
Biodetection Technologies 2010
Arlington, VA
http://www.knowledgefoundation.com/viewevents.php?event_id=216&act=evt

Jun 21–25
Nanotech 2010
Anaheim, CA
http://www.techconnectworld.com/Nanotech2010/

Jun 22–24
2010 Joint CBRN Conference & Exhibition
Ft. Leonard Wood, St Roberts, MO
http://exhibits.ndia.org/ndia/public/MainHall.aspx?eventid=643

CBRNIAC
Chemical, Biological, Radiological & Nuclear Defense Information Analysis Center

Bringing the CBRN Defense and Homeland Security communities together

CBRNIAC

Chemical, Biological, Radiological & Nuclear Defense
Information Analysis Center

"A Department of Defense Information Analysis Center—The Premier Resource for Authoritative CBRN Defense and Homeland Security Scientific and Technical Information"

In the News

Race On To Sniff Out Dirty Bombs
Cheryl Jones
The Australian
March 10, 2010
"David Boardman…will brief…on his research on technology to detect illicit radioactive material that could be used in dirty bombs. Dr. Boardman, a physicist at the Australian Nuclear Science and Technology Organisation in Sydney, is working to reduce false alarms in detectors deployed at ports and airports to scan cargo for radioactive isotopes."
http://www.theaustralian.com.au/higher-education/race-on-to-sniff-out-dirty-bombs/story-e6frgcjx-1225838861956

Backpack-Wearing Cockroaches to Detect Radiation
Austin Wright
National Defense
March 2, 2010
"The creature that's expected to inherit the Earth following a nuclear holocaust might also be well suited to help prevent man's atomic self-destruction. Researchers at Texas A&M University's Nuclear Security Science and Policy Institute have attached radiation sensors to the backs of cockroaches."
http://www.nationaldefensemagazine.org/archive/2010/March/Pages/BackpackWearingCockroaches.aspx

Engineering Team Developing Helicopter That Would Investigate Nuclear Disasters
Virginia Tech Press Release
March 1, 2010
"Students at Virginia Tech's Unmanned Systems Laboratory are perfecting an autonomous helicopter…Roughly six feet long and weighing 200 pounds, the re-engineered aircraft is designed to fly into American cities blasted by a nuclear weapon or dirty bomb. The helicopter's main mission would be to assist military investigators in the unthinkable: Enter an American city after a nuclear attack in order to detect radiation levels, map and photograph damage."
http://www.eng.vt.edu/news/article.php?niid=2138

DHS Tackles Next-Generation Bioterrorism Detector
Matthew Harwood
Security Management
March 1, 2010
"A government biosecurity expert last week briefed lawmakers on the Department of Homeland Security's next-generation "lab-in-a-box" to detect, to identify, and to aid response to a biological terrorism attack."
http://www.securitymanagement.com/news/dhs-tackles-next-generation-bioterrorism-detector-006842

Nuke Detection Protection Runs Coast To Coast
PNNL News Release
February 24, 2010
"A significant national security milestone was met recently with deployment of radiation detection technology that spans from coast to coast. Today, all vehicle cargo crossing the U.S.-Canadian border is scanned for radioactive materials."
http://www.pnl.gov/news/release.aspx?id=784

Obama Signs Nuclear Forensics Bill
Global Security Newswire
February 17, 2010
"U.S. President Barack Obama yesterday signed legislation…Nuclear Forensics and Attribution Act mandates the establishment of the National Technical Nuclear Forensics Center within the Homeland Security Department."
http://gsn.nti.org/gsn/nw_20100217_8302.php

New ORNL Sensor Exploits Traditional Weakness of Nano Devices
Oak Ridge National Laboratory News Release
February 12, 2010
"… Oak Ridge National Laboratory's Panos Datskos is developing a chemical and biological sensor with unprecedented sensitivity… will achieve a detection level that approaches the theoretical limit, surpassing other state-of-the-art chemical sensors. The implications could be significant for anyone whose job is to detect explosives, biological agents and narcotics."
http://www.ornl.gov/info/press_releases/get_press_release.cfm?ReleaseNumber=mr20100212-01

Continued pg. 15

Special Edition

The CBMS Special Edition of the Chem-Bio Defense Quarterly Magazine is Now Available!

CBMS Special Edition—This unique, special edition of Chem-Bio Defense Quarterly magazine highlights the Chemical Biological Medical Systems Joint Project Management Office (CBMS) that leads the Department of Defense (DoD) in the advanced development of transformational Chemical, Biological, Radiological, and Nuclear (CBRN) medical countermeasures (MCM) for the Warfighter. This edition provides an overview of several key areas of interest within CBMS that reflect its proactive approach to mission accomplishment.

To view the electronic version, visit: http://www.jpeocbd.osd.mil/packs/Magazine.aspx

Would you like to receive the link to upcoming issues or have a hard copy version for your office or organization? If so, complete the interactive form at https://jacks.jpeocbd.army.mil/jacks/Public/CBQuarterly/Default.aspx.

In the News *cont.*

Beryllium Cleanup Hydrogel Wins DoE ESS&H Award
Stephen Heiser
Nuclear Power Industry News
February 2010
"Use of DeconGel for Beryllium Cleanup Wins Department of Energy's Environmental, Security, Safety and Health (ESS&H) Achievement Award"
http://nuclearstreet.com/blogs/nuclear_power_news archive/2010/02/11/use-of-decongel-r-for-beryllium-cleanup-wins-department-of-energy-s-environmental-security-safety-and-health-ess-amp-h-achievement-award-02116.aspx

Mushroom Fruit Could Aid in Clean Up of Bioweapons
Nick Rees
Bio Prep Watch.com
February 10, 2010
"A strange new natural contender in aiding in the fight against biological weapons has stepped forward, with researchers learning that the fruit of mushrooms can be used in cleaning up following a biological attack."
http://www.bioprepwatch.com/news/211943

Effort Extended in Fight Against Lassa Virus
Nick Rees
Bio Prep Watch.com
February 9, 2010
"A major extension in the collaborative effort between Corgenix Medical Corporation and Tulane University has been announced to combat viral hemorrhagic fever."
http://www.bioprepwatch.com/news/211928

JVIC Companies To Develop Roving, Early Warning WMD Detector
Jordan Valley Innovation Center, Missouri State University Office of University Communications
February 8, 2010
"A new project being developed at the Jordan Valley Innovation Center (JVIC) at Missouri State University could save thousands of lives: an autonomous, self-deploying sensor that will serve as a roving, early warning detector of biological warfare activity."
http://jvic.missouristate.edu/news/2-8-10.php

Breakthrough Could Lead to Cure for AIDS and Other Deadly Viruses
Pam Baker
TechNewsWorld
February 4, 2010
"The discovery of a chemical given the unassuming name "LJ001" could mark the beginning of a new era of medicine. Because it attacks virus membranes, LJ001 may form the basis for treating a variety of ills, from annoying cases of flu to deadly outbreaks of Ebola, to HIV and many other viral killers, without any serious side effects."
http://www.technewsworld.com/rsstory/69259.html

DoDTechipedia: Collaboration is the Key to Success

The Department of Defense (DoD) has embraced the Web 2.0 evolution and launched its own wiki site – DoDTechipedia. This online collaborative encyclopedia for the science and technology (S&T) community, is similar to Wikipedia or Intellipedia (a wiki-based site for the United States intelligence community). With its launch in October 2008, as a joint project of the Under Secretary of Defense for Acquisition, Technology and Logistics (AT&L), Director, Defense Research and Engineering (DDR&E), Defense Technical Information Center (DTIC), Networks and Information Integration and Department of Defense Chief Information Officer (NII/DoD-CIO), and Rapid Reaction Technology Office (RRTO), DoDTechipedia aims to foster communication and collaboration with greater transparency among DoD scientists, engineers, the acquisition community, and operational warfighters.

"This tool enables DoD personnel to collaborate on technological solutions, reduce costs, add capability and avoid duplication. DoDTechipedia aids in the rapid development of technology and the discovery of innovative solutions to meet critical capability needs and gaps," states Christopher Thomas, DTIC Chief Technology Officer.

DoDTechipedia is available to DoD, federal government employees, and their contractors with a Common Access Card (CAC) or DTIC registration (https://register.dtic.mil/wobin/WebObjects/RegLite?SiteID=Wiki). Although this wiki site is limited access, it contains unclassified information only. A classified version of DoDTechipedia is also available for SIPRNet users to collaborate in a secure environment.

DoDTechipedia is truly a collaborative effort, and every contribution counts to ensure this collective knowledge base expands. Users are encouraged to participate by creating a page, asking a question, starting a blog or posting events relative to their organization or area of expertise on the site. "Gardening," performing small edits on wiki content to improve its overall quality and helping cultivate interaction and participation within the community of users, is also encouraged.

To get started, visit https://www.dodtechipedia.mil and complete the short registration process today. Have no fear if wikis are a new concept to you, help is available. Tutorials are posted on the site to aid you with each aspect of getting started. DoDTechipedia workshops and hands-on training sessions are offered in several formats including an online webinar; if you are interested in attending a workshop or webinar, please contact Ms. Stephanie Beeler with DTIC Marketing at 703.767.8216 / marketing@dtic.mil.

New CBRNIAC Information Resources

National Science and Technology Council, Committee on Science, Interagency Working Group on Scientific Collections. **Scientific Collections: Mission-Critical Infrastructure of Federal Science Agencies**. Washington, DC: Office of Science and Technology Policy, 2009

"Scientific collections are preserved because they document the results of research, and allow earlier findings to be confirmed and extended. Scientific collections are often re-analyzed using new instruments and techniques, providing new data and insights from old specimens. Collections provide irreplaceable evidence of long-term historical trends, allowing researchers to make predictions into the future. Scientific specimens can also have unanticipated relevance to research being conducted in fields other than the one for which they were collected." (*Executive Summary*)

CB-116083
ISBN 978-0-9819500-0-6
Interagency Working Group on Scientific Collections
Committee on Science
Office of Science and Technology Policy
Executive Office of the President
725 17th Street Room 5228
Washington, DC 20502
Phone: (202) 456-7116

Nuclear Posture Review Report. Washington, DC: Department of Defense, 2010.

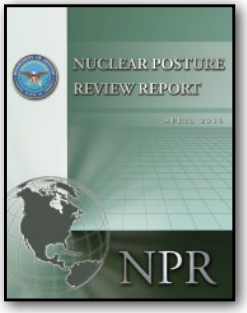

"This Nuclear Posture Review provides a roadmap for implementing President Obama's agenda for reducing nuclear risks to the United States, our allies and partners, and the international community. As the President said in Prague last year, a world without nuclear weapons will not be achieved quickly, but must begin to take concrete steps today." (*Preface*)

CB-117292
2010 Nuclear Posture Review Report
Department of Defense
1400 Defense Pentagon
Washington, DC 20301-1400
Phone: (703) 571-3343

Amerithrax Investigative Summary. Washington, DC: The United States Department of Justice, 2010.
http://www.justice.gov/amerithrax/docs/amx-investigative-summary.pdf

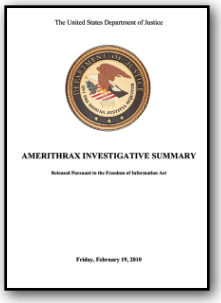

"This Investigative Summary sets forth much of the evidence that was developed in the Amerithrax investigation. In the fall of 2001, the anthrax letter attacks killed five people and sickened 17 others. Upon the death of the first victim of that attack, agents from the Federal Bureau of Investigation ("FBI") and the United States Postal Inspection Service ("USPIS") immediately formed a Task Force and spent seven years investigating the crime." (*Amerithrax Investigative Summary*)

CB-109711
The United States Department of Justice
950 Pennsylvania Avenue, NW
Washington, DC 20530-0001
Phone: 202-514-2000

Quadrennial Homeland Security Review Report: A Strategic Framework for a Secure Homeland. Washington, DC: The U.S. Department of Homeland Security, 2010.
http://www.dhs.gov/xlibrary/assets/qhsr_report.pdf

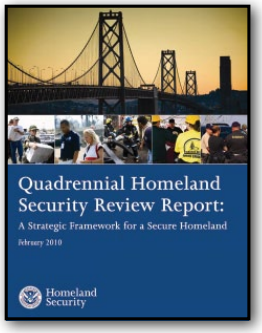

"The purpose of the first-ever Quadrennial Homeland Security Review (QHSR) is to outline the strategic framework to guide the activities of participants in homeland security toward a common end." (*Executive Summary*)

CB-112027
U.S. Department of Homeland Security
Washington, DC 20528
Phone: 202-282-8000

Sokolski, Henry, editor. **Pakistan's Nuclear Future: Reining in the Risk**. Carlisle, PA: The Strategic Studies Institute, 2009.
http://www.strategicstudiesinstitute.army.mil/pdffiles/PUB963.pdf

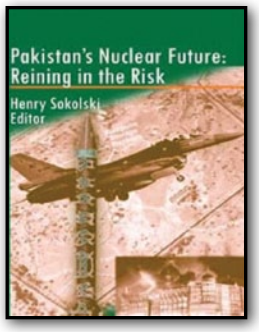

"…a nuclear terrorist act is only one—and hardly the most probable—of several frightening security threats Pakistan now faces or poses. We know that traditional acts of terrorism and conventional military crises in Southwest Asia have nearly escalated into wars and, more recently, even threatened Indian and Pakistani nuclear use… The intent of this book is to conduct a significant evaluation of these threats… These analyses offer a window into what is possible and why Pakistani nuclear terrorism is best seen as a lesser included threat to war, and terrorism more generally…" (*Brief Synopsis*)

CB-109610
ISBN 1-58487-422-8
Strategic Studies Institute
U.S. Army War College
122 Forbes Avenue
Carlisle, PA 17013-5244
Phone: (717) 245-4133

Real-World Anthrax Scare Proves Readiness

By Kris Osborn, Joint Program Executive Office For Chemical and Biological Defense

The Joint Project Manager Guardian (JPMG) Chemical, Biological, Radiological Nuclear Installation Protection Program (CBRN-IPP), aimed at preparing U.S Military Installation First Responders to respond to chemical and biological threats, was put to the test during a January 6, 2010 incident at Naval Air Station (NAS) Fallon/ Hawthorne Army Depot, Nevada, when an employee discovered a white, silt-like substance in an envelope, Pentagon and Army officials said.

The JPMG, a subordinate office to the Joint Program Executive Office for Chemical and Biological Defense (JPEO-CBD), leads the Installation Protection Program, Force Protection, Joint Operations Support CBRNE and Consequence Management Product Managers, who work daily to address these types of threats.

"In this case, Explosive Ordnance Detachment Mobile Unit 11[EODMU 11] responded to a call for an anthrax scare," said Preston Smith, JPMG IPP installation lead for NAS Fallon.

The EOD team was on the scene within 90 minutes with protective suits and chemical, biological and radiological detection equipment engineered to test samples of the substance, said U.S. Air Force Lt. Col. Todd Kustra, Product Manager, CBRN-IPP.

The equipment, acquired through and provided by the Pentagon's JPEO-CBD, included protective suits, forensic analysis materials, and a biological detection device called a Hand Held Assay (HHA).

"It [HHA] is a direct sample system that tests for the presence of eight biological agents. After the EOD team documented the evidence collected, it was shared with the FBI," said Kustra. The results provided by the HHA are considered to be presumptive; the FBI's job is to send them to a laboratory for more confirmatory results.

The EOD team also used a Forensic Analytical Center (FAC) sampling kit to collect and transport the materials in question.

"You have a chain of custody. This kit [the FAC] helps secure the sample and seal it for transport to the next location in the chain of custody," said Kustra.

Although initial findings determined the substance was not a threat, the real-world incident provided an occasion to measure the effectiveness of IPP training and equipment.

"Speaking with the team at Fallon, they appreciated the training and equipment we turned over. They were satisfied. They were ready to respond. All the personnel responded accordingly," said Smith.

The employee who discovered the substance and one co-worker were quarantined and given medical attention.

Beginning in 2004 and aimed at bringing chemical and biological detection training and equipment to 180 installations worldwide by 2015, the IPP is geared toward preparing U.S. Military Installation First Responders to respond to unconventional threats deemed more likely in a post-9/11 environment, Kustra said.

"The training is a well-coordinated series of events starting with equipment delivery. Once the equipment is delivered, we train the users how to properly operate it. Once everyone is up to speed, we go through a New Equipment Training Seminar (NET-S), Functional Exercise (FE) and then a Full-Scale Exercise (FSE)," said Kustra.

Military leaders were pleased with the state of readiness at the installation.

"This reflects our dedication to providing Warfighters the best possible equipment to remain fully prepared to engage any threat at any time anywhere in the world," said U.S. Army Brig. Gen. Jess A. Scarbrough, the Joint Program Executive Officer for Chemical and Biological Defense. "The Joint Project Managers of the JPEO-CBD are at the forefront in developing effective processes through dual-purpose technologies that will continue to help us identify and correctly respond to the threats we may face."

History of Army Chemical and Biological Decontamination – Part VIII

By Jeffery K. Smart, U.S. Army Research, Development and Engineering Command Historian

This article is Part VIII of a series of articles extracted from the ***History of Army Chemical and Biological Decontamination***, by Mr. Jeffery K. Smart, U.S. Army Research, Development and Engineering Command (RDECOM) Historian, July 2007. This presentation is edited, with permission of the author, for the ***CBRNIAC Newsletter***.

THE 1990s

Decontamination Agents

Biological Decontamination

At the end of the 20th century, the Army did not have a standardized biological specific decontaminant in case of a biological attack. Instead, the Army relied on the standardized chemical decontaminants DS2 and STB for biological decontamination. The 1993 field manual for decontamination also recommended using soap and water to remove most biological agents from the skin. An alternative was to use a weak solution of sodium hypochlorite (household bleach). The manual listed a number of non-standard biological decontaminants to include: formalin (formadehyde), detrochlorite (a mixture of diatomaceous earth, anionic wetting agent, calcium hypochlorite, and water), paracetic acid, ethylene oxide (ETO), and carboxide (a mixture of ETO and carbon dioxide). Most of these decontaminants had problems because they were toxic, very corrosive, or flammable.[68]

Decontaminating Equipment

M17A1/M17A2/M17A3 Decontaminating Apparatus

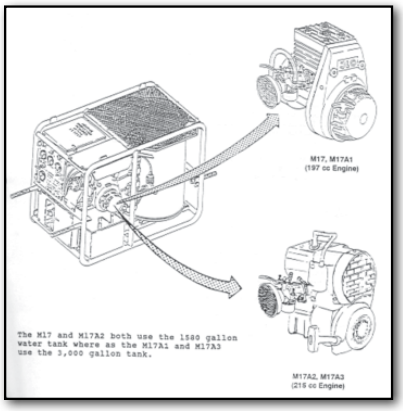

Problems with the production of the original 197 cc engine provided with the M17 Lightweight Decontamination System led to the Army standardizing three additional versions of the unit in 1992. The M17A1 had the original engine but added a 3,000-gallon collapsible tank. The M17A2 included a new replacement 215 cc engine with a 1,500-gallon tank. The M17A3 added the new engine and the 3,000-gallon tank. Additional work for the Marines in 2000 resulted in modifications to the engine that allowed it to use JP 5/8 fuel, the selected "one fuel forward" for the Marines.[69]

M295 Individual Equipment Decontamination Kit

The improved design of the M291 Skin Decontaminating Kit led the Army to design the M295 Individual Equipment Decontamination Kit to replace the M280 Individual Equipment Decontamination Kit. The M295 was standardized in 1992 to enhance a soldier's ability to decontaminate his individual equipment in the field. It consisted of a pouch holding four individual polyester wipe-down mitts holding XE-555 Resin that absorbed the chemical agent and then neutralized it. In 1999, the XE-555 Resin was replaced by Sorbent Powder Decontaminate, used in the newer M100 Sorbent Decontamination System. In 2001, the pouch was replaced by a packet assembly to decrease cost and simplify production.[70]

Modular Decontamination System (MDS)

One of the lessons learned during Operation Desert Shield/Storm was the need for a more easily deployable decontamination system that used water more efficiently in a dry environment. To replace labor intensive and time-consuming decontamination systems such as the M12A1 Power Driven Decontaminating Apparatus, the M17 Lightweight Decontamination System, and the smaller M11 and M13 Decontaminating Apparatus when used for detailed equipment decontamination, the Army standardized the Joint Service Modular Decontamination System (MDS) in 1998. The MDS consisted of one M21 Decontaminant Pumper (DP) and two M22 High-Pressure/Hot Water (HPW) modules. The MDS reduced water usage and decontaminated vehicles faster than the older systems. The M21 DP dispensed DS2 or other field decontaminants

Continued pg. 19

such as formalin, household bleach, or diesel fuel through two spray wands during the decontaminant application step of detailed equipment decontamination. In 2002, the requirement for the M21 DP was suspended by the Commandant of the U.S. Army Chemical School due predominately to concerns over the use of DS2. The M22 HPW provided high pressure and high volume hot or cold water and liquid detergents to physically remove dirt, mud, and agents during the initial wash step of detailed equipment decontamination and then to remove the applied decontaminant in the rinse step. The M22 can pull water from various sources to include hydrants worldwide and natural sources and provide personnel showers. The M22 can be mounted on a trailer for transportation and operation. Additional authorized items included a 3,000-gallon collapsible water tank for each M22 and a diesel water pump. Designed for use by the Army's dual-purpose smoke/chemical companies, the MDS when mounted on trailers will be towed by the M56 Mechanized Smoke Generating System. In additional to DS2, the M22 HPW can also dispense decontaminant solutions such as Enzyme Decontamination Solution and Decontamination Foam.[71]

THE 2000s

Decontamination Agents

Biological Decontamination for Homeland Defense

In October 2001, the need for a biological decontaminant for a bioterror attack became a critical necessity after anthrax-laced letters were mailed to both public and private buildings in several states. Many decontaminants were examined to remove the anthrax from the buildings, but the U.S. Environmental Protection Agency recommended chlorine dioxide gas due to its less harmful side affects. It was successfully used to decontaminate the Hart Senate Office Building after three months of work. Liquid chlorine was also used to further decontaminate office furniture and fixtures. For a contaminated postal facility, vaporized hydrogen peroxide was used to remove the anthrax. To prevent future contamination through the mail, the U.S. Postal Service began irradiating unopened letters to destroy any additional anthrax spores.[72]

Decon Green

Decon Green was developed by the Army for use as an environmentally safe decontaminant for chemical and biological agents. It is also effective against toxic industrial chemicals and materials. As a possible replacement for DS2, it is noncorrosive and much safer to handle. The first formulation (called standard or classic) consisted of hydrogen peroxide, carbonate/bicarbonate, and co-solvents. Additional work resulted in an improved version (called new) that decontaminated VX better. The Army patented the formula for Decon Green in 2001 and then partnered with the STERIS Corporation to produce and distribute it.[73]

Enzymatic Decontamination

Army researchers developed and patented an enzyme-based decontaminant that was environmentally safe and provided effective chemical and biological agent decontamination. The advance catalytic enzymatic system (ACES) was non-corrosive, non-flammable, and both user and equipment safe. In 2004, a patent agreement allowed a private company, Genencor International, Inc., to produce and sell organophosphorous acid anhydrolase (OPAA) and organophosphorous hydrolyzing (OPH) enzymes under the name "Defenz."[74]

Decontamination Foam 200 (DF-200)

Sandia National Laboratories first started development of Sandia Foam in 1997 for use as a decontaminant for both chemical and biological agents. The first version, developed in 1999 and designated DF-100, was used to help remove anthrax from Congressional office buildings in Washington, D.C., after the 2001 incident. An improved version, designated DF-200 was patented in 2003 and licensed to two commercial firms for production. The key active decontaminant is hydrogen peroxide. DF-200 can be used on all types of equipment, terrain, and structures and can be used as a foam, liquid spray, or fog. It is also environmentally safe and can be dispensed from a variety of decontamination apparatus. The Army became interested in DF-200 as a replacement for DS2 and procured large amounts for use in Operation Iraqi Freedom in 2003.[75]

Reactive Skin Decontamination Lotion (RSDL)

RSDL is a commercial decontaminate developed by a Canadian company for the Canadian Defence Research Establishment. It is designed to decontaminate chemical agents and the toxin T-2 on the face, neck, and hands. RSDL is a yellow-color lotion made from potassium butanedione mono-oximate. The Food and Drug Administration approved RSDL for skin decontamination use in 2003 and in 2004, E-Z-EM, Inc., was contracted to start producing RSDL. In 2007, RSDL was approved for procurement by the Department of Defense. The Army plans to use RSDL to replace the XE-555 used in the M291 Skin Decontaminating Kit.[76]

Decontaminating Equipment

M100 Sorbent Decontamination System (SDS)

To replace the M11 and M13 Decontaminating Apparatus that used DS2, the Army standardized the M100 Sorbent Decontamination System (SDS) in 2002. The SDS consisted of two packs of reactive sorbent powder

Continued pg. 20

and two wash mitt applicators that eliminated the need for water and decreased the time for chemical decontamination. The reactive sorbent powder was both non-toxic and non-corrosive, unlike DS2, and did not interfere with chemical agent detectors. It could also be used at greater temperature ranges than DS2. The SDS weighed less than the M11 and was designed to fit in the M11's mounting bracket.[77]

Joint Materiel Decontamination System (JMDS)

The continuing need for sensitive equipment and interior decontamination capabilities led to the JMDS development program. Originally two separate programs designated the Joint Service Sensitive Equipment Decontamination (JSSED) and Joint Platform Interior Decontamination (JPID), the JMDS was initiated in 2006 to create a non-aqueous decontamination system that would not damage or destroy key equipment. The JMDS concept was a vaporous decontaminant technology for use in the interiors of vehicles, aircraft, and ships while on-the-move or at fixed sites.[78]

Joint Service Personnel/Skin Decontamination System (JSPDS)

The JSPDS will be the replacement for that M291 Skin Decontaminating Kit and will use the Reactive Skin Decontamination Lotion (RSDL), a commercially available product approved by the Food and Drug Administration. In addition to skin, the JSPDS will also be able to decontaminate some individual equipment.[79]

Joint Service Transportable Decontamination System (JSTDS)

The JSTDS will consist of two formats, one for small-scale (SS) and one for large-scale (LS) decontamination. The JSTDS-SS will be for tactical decontamination situations such as vehicles, small weapons, small aircraft, and some shipboard surfaces. It will consist of a decontaminant, applicator, and shower capability. It will not be man-portable, but can be mounted on a variety of general purpose vehicles. The JSTDS-SS will replace the M17 series Decontamination Apparatus and will be able to use DF-200 foam. The JSTDS-LS will be for large-scale decontamination operations to include large aircraft, facilities, terrain, seaports, and non-sensitive equipment. The system will be able to use non-hazardous and environmentally safe decontaminants to include DF-200 foam and will replace the M12A1 Decontamination Apparatus.[80]

Joint Portable Decontamination System (JPDS)

The JPDS will consist of an applicator and environmentally safe chemical and biological decontaminants. The JPDS will be designed for one-person use on non-sensitive small equipment and key areas on large equipment. The JPDS will decontaminate equipment to levels beyond the capability of currently fielded items.[81]

Endnotes

68. FM 3-5, 1993, pp. 2-1, F-1 to F-9.
69. MSR 06926019, 30 Apr 92; Project Task Fact Sheet, 10 Nov 92; TM 3-4230-228-10, Change 5, 1997, p. 1-8.3; "Lightweight Decontamination System (LDS)," *CB Quarterly* 24 (December 2000): 23.
70. Information Sheet, "Decontamination Kit, Individual Equipment: M295," 26 Oct 01; Project Task Fact Sheet, 10 Nov 90; FM 3-5, 1993, p. A-2; Mauroni and Walden, 32; Information Sheets, "M195 IED Kit," 15 Jul 02 and 16 Jul 02.
71. Information Sheet, "Joint Service Modular Decontamination System M21 DP/M22 HPW," 26 Oct 01; "Modular Decontamination System to Enter into Army Chemical Defense Inventory," *CB Quarterly* 17 (March 1999): 9; Department of Defense, "*Joint Service Chemical and Biological Defense Program* (FY02-03), 58-59.
72. EPA, Information Paper, "Fact Sheet for the Hart Senate Office Building Cleanup," 20 Nov 01; EPA, Information Paper, "Anthrax Cleanup Information," 1 Nov 01; EPA, Information Paper, "Hart Senate Office Building Decontamination Progressing," 3 Dec 01; Baltimore *Sun*, 2 Jan 02, 23 Jan 02, 20 Feb 02; Rowe, Steiner, and Lisowski, "An Overview of Chemical/Biological Decontamination," *Chem-Bio Defense Quarterly* (April-June 2007), 28.
73. Edgewood Chemical Biological Center, Information Paper, "Decon Green," 74 Mar 04; Science Applications International Corporation, *Compilation of Available Data on Building Decontamination Alternatives* (EPA/600/R-05/036), March 2005, 67-77; George W. Wagner, Lawrence R. Procell, Vikki D. Henderson, David C. Sorrick, Zoe A. Hess, David G. Gehring, and Mark D. Brickhouse, Information Paper, "Decon Green," 17 Nov 04.
74. Edgewood Chemical Biological Center, *Annual Report* (2004), 7; "ECBC's Decontamination Technology Licensed by Genecor International, Inc.," *CB Quarterly* (Issue 35), 21.
75. John German, "US Army Orders Chem-Bio Decon Formulation in Deployment Quantities," *Sandia Lab News* 54, no. 21 (18 Oct 02); Sandia National Laboratories, Fact Sheet, "Sandia Decon Formulation for Mitigation and Decontamination of Chemical and Biological Warfare Agents, Chemical Toxins, and Biological Pathogens, December 2003; Modec, Inc., Fact Sheet, "MDF-200 – An Enhanced Formulation for Decontamination and Mitigation of CBW Agents and Biological Pathogens," undated; Science Applications International Corporation, *Compilation of Available Data on Building Decontamination Alternatives* (EPA/600/R-05/036), March 2005, 67; Rowe, Steiner, and Lisowski, "An Overview of Chemical/Biological Decontamination," *Chem-Bio Defense Quarterly* (April-June 2007), 28.
76. U.S. Food and Drug Administration, News Release No. P03-24, "FDA Clears Skin Lotion for Military to Protect Against Chemical Burns," 28 Mar 03; Department of Defense, *Chemical and Biological Defense Program: Annual Report to Congress* (April 2007), E-3; Rowe, Steiner, and Lisowski, "An Overview of Chemical/Biological Decontamination," *Chem-Bio Defense Quarterly* (April-June 2007), 28; E-Z-EM, Inc., News Release, "E-Z-EM's RSDL Product Approved for Procurement by U.S. Defense Department," 20 Mar 08.
77. Information Sheet, "Sorbent Decontamination System, M100," 26 Oct 01; Department of Defense, *Chemical and Biological Defense Program: Annual Report to Congress* (April 2007), E-2.
78. Department of Defense, *Chemical and Biological Defense Program: Annual Report to Congress* (April 2007), E-4.
79. Ibid., E-3.
80. Ibid., E-5 to E-6.
81. Ibid., E-5.

Disclaimer

The findings in this report are not to be construed as an official Department of the Army position unless so designated by other authorizing documents. The use of trade or manufacturers' names in this report does not constitute an official endorsement of any commercial products. This report may not be cited for purposes of advertisement.

This concludes the CBRNIAC's presentation of the ***History of Army Chemical and Biological Decontamination*** series.

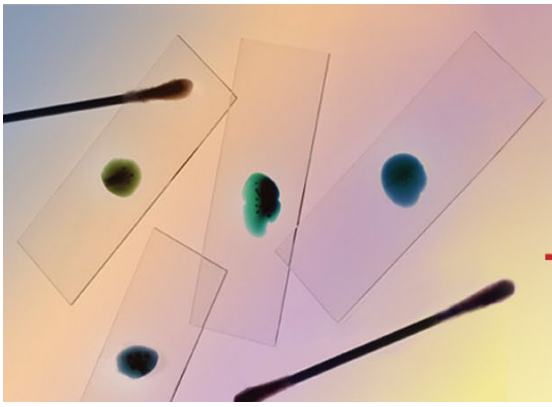

CBRNIAC FORUM

BIOFORENSICS RESOURCES AND REPOSITORIES
31 MARCH 2010

CBRNIAC Hosts Technical Forum on Bioforensics Resources and Repositories

AGENDA

0800–0830 **Registration**

0830–0900 **Welcome and Opening Remarks**
Don McGonigle, CBRNIAC

0900–1100 **Characterization of Current Repository Initiatives**
Panel Moderators: Frank Simione, Jason Bannan

John Murphy
Judith Hewitt
Alex Rooney
Mike McIntosh
Q&A

1100–1330 **Equitable Collaboration Strategies**
Panel Moderators: Tonya Nichols, Jayne Morrow

Scott Miller
Paul Keim
Lynn Schriml
Phillip Williamson
Randy Murch
Q&A

1340–1530 **National Initiatives in Scientific Collections**
Panel Moderators: Pete Pesenti, Peter Emanuel

Pete Pesenti
Peter Emanuel
Matt Davenport
Robert Bull
Q&A

1530–1630 **Recommendations and Wrap-Up**

Scientific collections and reference repositories are extremely critical resources in bioforensics, but significant operational gaps between them limit their usefulness. The **CBRNIAC Technical Forum on Bioforensics Resources and Repositories**, held March 31, 2010 at the Battelle Eastern Science & Technology Center in Aberdeen, Maryland brought together members of the microbial forensics communities from government, academia, and industry in order to identify needs and develop recommendations for addressing these gaps.

Mr. Donald McGonigle welcomed approximately 50 attendees to the Forum. After presenting a brief overview of CBRNIAC capabilities and resources, he reviewed the Forum agenda and set the tone for a series of discussions on the operational challenges that limit the use of bioforensic resources. Mr. McGonigle introduced the members of the CBRNIAC inquiry staff who were on site to accept inquiry requests and record recommendations made during the Forum discussions for later compilation and distribution to Forum attendees. CBRNIAC Technical Area Task (TAT) program representatives were on hand to answer questions about the capabilities available for project efforts.

Each of the panel moderators introduced the speakers for their panel topic and guided the dialog during the presentations. Time for a Question and Answer (Q&A) session was included for each topic.

At the end of the day, attendees provided a series of comments, concerns, and recommendations that were collected and recorded for future distribution to attendees. Mr. McGonigle brought the session to a close with a summary of the days' discussion highlights, action items, and future collaboration efforts.

The Subject Matter Experts (SMEs)

Donald B. McGonigle
Mr. McGonigle is a CBRNIAC SME and Principal Research Scientist for Battelle with over 28 years experience in all aspects of systems engineering, program and content management with specialized expertise in Chemical and Biological defense solutions. He is the manager for CBRNIAC Content Management & Information Operations. Mr. McGonigle holds a B.S. in biomedical engineering from Duke University.

Continued pg. 22

Frank P. Simione, M.S.
Mr. Simione is Vice President of Management Services at ATCC (American Type Culture Collection) and is responsible for commercial and government biological materials management services. He has been with ATCC for 35 years and has been a member of the ATCC senior management team for the past 21 years. Frank is a founding member and a Past-President of the International Society for Biological and Environmental Repositories (ISBER). Mr. Simione received a BA. degree in biology from Temple University and a M.S. degree in biology from Bucknell University.

John Murphy, M.B.A.
Mr. Murphy serves as Business Operations Lead for the Office of the Associate Director for Science (OADS), Office of the Director, Center for Disease Control (CDC). He is a member of the Associate Director for Science's management team. He is responsible for management functions of the Office, supporting the management needs of OADS subordinate offices, for special projects of interest to the Associate Director for Science, and for maintaining strong rapport and reporting channels to the Associate Director for Management. He serves as project officer for CDC contracts, such as the CDC/Agency for Toxic Substances and Disease Registry (ATSDR) Specimen Packaging, Inventory and Repository [CASPIR], and as business steward for the Archival Specimen Tracking and Retrieval Operations (ASTRO). John has an MBA from Florida Institute of Technology.

Judith Hewitt, Ph.D.
Dr. Hewitt is Chief of the Research Resources Section in the Office of Biodefense Research Affairs, Division of Microbiology and Infectious Diseases(DMID), National Institute of Allergy and Infectious Diseases (NIAID), National Institute of Health (NIH). Her group is responsible for several resources within the DMID, namely contract programs providing "Animal Models of Infectious Diseases," "Microbiology & Infectious Diseases Biological Resource Repository," and "In Vitro Assessments for Antimicrobial Activity." Dr. Hewitt earned her Ph.D. from Johns Hopkins University and completed post-doctoral fellowships at the national Institute of Child Health and Human Development (NICHD) and the Cleveland Clinic Foundation before taking faculty-level positions at the University of Maryland and NIAID.

Alejandro (Alex) Rooney, Ph.D.
Dr. Rooney is a research geneticist with the National Center for Agricultural Utilization Research, U.S. Department of Agriculture, Agricultural Research Service (ARS), U.S. Department of Agriculture (USDA) in Peoria, Illinois and is the Administrator for the ARS Culture Collection, the nation's largest government-funded microbial repository accessible by the public scientific community. He conducts research in the areas of microbial population genetics, phylogenetic systematics, and molecular evolution. Dr. Rooney received his bachelor's degree in biology from the University of Cincinnati and a doctoral degree in genetics from Texas A&M University. He completed postdoctoral studies at Penn State University's Institute for Molecular Evolutionary Genetics and was a faculty member at Mississippi State University for two years prior to joining the USDA in 2002.

Michael T. McIntosh, Ph.D.
Dr. McIntosh is the Head of the Proficiency and Validation Services Section and the Head of Bioforensics, Foreign Animal Disease Diagnostic Laboratory, Plum Island Animal Disease Center, National Veterinary Services Laboratories (NVSL), Animal and Plant Health Inspection Service (APHIS), U.S. Department of Agriculture (USDA). He has devoted his professional career to the field of Infectious Diseases. He worked in immuno-chemistry prior to beginning a research career in 1988 in Herpes Virology at the Thomas Jefferson University School of Medicine. After receiving his Ph.D. in molecular and cellular biology from the Medical College of Pennsylvania and Hahnemann University, he moved on to postdoctoral research in neurovirology at the Institute of Molecular Medicine at Thomas Jefferson University. In 2000, he moved to Yale University as Faculty within the Section of Infectious Diseases in the Department of Internal Medicine. In 2004, he joined the Foreign Animal Disease Diagnostic Laboratory at the Plum Island Animal Disease Center in Greenport, NY.

Tonya Nichols, Ph.D.
Dr. Nichols is the Acting Associate Division Director for the Threat and Consequence Assessment Division within the Environmental Protection Agency's (EPA's) National Homeland Security Research Center (NHSRC). Dr. Nichols is the technical lead for the incident-based microbial risk assessment research program. She is the EPA Project Officer for the Support for Environmental Rapid Risk Assessment (SERRA) database that contains an extensive compilation of scientific information designed to assist in assessing and mitigating hazards in the aftermath of a bioterrorist event. Dr. Nichols received her Ph.D. in microbiology from the University of Louisville and an M.S. in biology from Baylor University.

Jayne Morrow, Ph.D.
Dr. Morrow is an Environmental Engineer at the National Institute of Standards and Technology (NIST). Her research focuses on measurements to understand and predict microbe/surface interfacial processes relevant to natural and engineered systems. Her current work is focused on analyzing standard methods for surface sampling to rapidly assess the extent of contamination and decontamination effectiveness for building contamination and for biodetection in the field. Dr. Morrow holds a B.S. in civil engineering from Montana State University, and an M.S and Ph.D.in environmental engineering from the University of Connecticut.

Scott Miller, Ph.D.
Dr. Miller serves as Deputy Under Secretary for Science of the Smithsonian Institution, responsible for major research, collections management, exhibits, and education programs of national and international scope in astronomy, geology, anthropology and biology. Dr. Miller holds a Ph.D. from Harvard. Previously, he led the natural science department and Hawaii Biological Survey at the Bishop Museum in Hawaii. In Kenya he directed the biodiversity and conservation program at the International Centre of Insect Ecology and Physiology. At the Smithsonian, Dr. Miller has served as the Chairman of the Department of Systematic Biology at the National Museum of Natural History (NMNH) and Associate Director for Science at the National Zoological Park. Dr. Miller continues his appointment as a research entomologist at NMNH, Chair of the Consortium for the Barcode of Life, and Co-Chair of the U.S. Government Inter-Agency Working Group on Scientific Collections.

Paul Keim, Ph.D.
Dr. Keim holds the E. Raymond and Ruth Cowden Endowed Chair in Microbiology at Northern Arizona University (NAU), where he is also a Regents Professor of Biology. In addition, he directs the Pathogen Genomics Division at The Translational Genomics Research Institute

Continued pg. 23

(TGen). His research interests revolve around genetic diversity and its organization in populations and species. This has involved systematic and phylogenetic analyses to understand how observable genetic diversity is based upon past evolutionary processes. Biodefense programs have capitalized upon his approach of using genomic analysis to understand bacterial pathogen populations for microbial forensics and molecular epidemiological analyses. Dr. Keim received his B.S. in biology and chemistry from Northern Arizona University in 1977 and his Ph.D. in botany (biochemistry) in 1981 from the University of Kansas.

Lynn Schriml, Ph.D.
Dr. Schriml is an Assistant Professor at the University of Maryland, School of Medicine in the Department of Epidemiology and Preventive Medicine and at the Institute of Genome Science (IGS) in Baltimore, Maryland. Dr. Schriml's current research focuses on developing bioinformatic tools, metadata standards and ontologies to gain a broader understanding of the relationship between infectious pathogens, their genomic sequence and disease. Following Dr. Schriml's postdoctoral research at the National Cancer Institute - Frederick Cancer Research and Development Center. Dr. Schriml transitioned to bioinformatics. Dr. Schriml developed bioinformatics tools for model organism genome projects at the National Center for Biotechnology Information (NCBI) at NIH as a Staff Scientist prior to joining the Institute for Genome Research (TIGR) in 2005 to develop the microbial surveillance Gemina project.

Phillip C. Williamson, Ph.D.
Dr. Williamson's expertise includes microbial genomics, bacterial physiology, and molecular diagnostics. He is the Director of the Center for Biosafety and Biosecurity in the Institute for Investigative Genetics at the University of North Texas Health Science Center (Ft. Worth). The Center's research programs include vector-borne emerging infectious disease and microbial forensics. His primary research focus is the development of methods and tools for the rapid assessment of disease outbreak and for the study of the epidemiology, genetics and associated clinical manifestations of emerging pathogens. He currently has active research projects performing environmental monitoring emerging pathogens in vector populations in the Southern United States and South America. Dr. Williamson holds M.S. and Ph.D. degrees in molecular biology.

Randall S. Murch, Ph.D
Dr. Murch is Associate Director, Center for Technology Security and Policy and Adjunct Professor, Virginia Polytechnic Institute (VPI) and State University, National Capital Region, Alexandria, Virginia. He is also a Visiting Professor, Program on Science and Security, Department of War Studies, King's College London, UK. Dr. Murch began his career at the Federal Bureau of Investigation (FBI), where he focused on counterintelligence, counterterrorism, forensic science, technology development and technical operations and WMD terrorism. He created the FBI's WMD forensic investigative program, which has become a national priority and has been embraced by other Federal agencies. Later in his career with the FBI, he was detailed to the Defense Threat Reduction Agency (DTRA), Department of Defense, where he led advanced studies on complex current and future challenges dealing with weapons of mass destruction. Before VPI, Dr. Murch was at the Institute for Defense Analyses (IDA). Dr. Murch holds B.S., M.S. and Ph.D. degrees in the life sciences.

Pete Pesenti, Ph.D.
Dr. Pesenti is currently Chief, Threat Characterization and Attribution Branch within the Department of Homeland Security Chemical-Biological Division, Directorate of Science and Technology. In his current position, he is responsible for the technical oversight and management of research programs conducted at the National Biodefense Analysis and Countermeasures Center (NBACC) and all chemical–biological risk assessments. Before joining DHS, Dr. Pesenti was a project manager with the legacy Chemical–Biological Nonproliferation Program (CBNP) at the Department of Energy. He was also the lead project officer for the newly established microbial forensics research program in collaboration with the NBFAC, Federal Bureau of Investigation and the Intelligence Community. At DHS S&T he has held a variety of positions in the Biological Countermeasures Portfolio. Dr. Pesenti is a retired Air Force Lt. Colonel with over 30 years of experience as a senior program manager. Dr. Pesenti holds a Ph.D. in environmental microbiology from George Mason University, an MBA in health systems from Golden Gate University, an M.S. in systems management from the Air Force Institute of Technology, and a B.A. in biology from St. Michael's College, Vermont.

Peter Emanuel, Ph.D.
Dr. Emanuel is the Assistant Director for Chemical and Biological Countermeasures at the White House Office of Science and Technology Policy (OSTP). His responsibilities include managing a portfolio on chemical and biological detection, decontamination, and protection issues as well medical countermeasures and related life sciences' policies of interest to the science and technology community. Prior to joining OSTP he served as the Branch Chief for the BioDefense Team at the Edgewood Chemical Biological Center. Previously, he served four years as the Program Manager for the Critical Reagents Program assigned to the Joint Project Manager Chemical Biological Medical Systems (Frederick, Maryland). Dr. Emanuel earned a Ph.D. in molecular and cell biology from the Pennsylvania State University and a B.S. in microbiology from the University of Maryland at College Park.

Matthew Davenport, Ph.D.
As a Program Manager in the Chemical and Biological Research and Development Branch (CBRD) of the DHS Science and Technology Directorate, Dr. Davenport coordinates a number of bioinformatics efforts including the development of new bioinformatics databases and software, as well as sequencing strains of biological threats and their genetic near-neighbors. Dr. Davenport also manages the DHS Public Safety Actionable Assay (PSAA) program and Chairs the Stakeholders Panel on Agent Detection Assays (SPADA) to establish voluntary consensus standards for the validation of biological detection technologies used by First Responders and private-sector end-users. Dr. Davenport came to DHS as a Science & Technology Policy Fellow from the American Association for the Advancement of Science. Prior to DHS, he was a postdoctoral fellow at The Johns Hopkins School of Medicine and Memorial Sloan-Kettering Cancer Center. Dr. Davenport earned his doctorate from the Department of Microbiology and Immunology at the University of North Carolina at Chapel Hill and holds a B.S. in microbiology from North Carolina State University.

CBRNIAC
1204 Technology Drive
Aberdeen, MD 21001-1228

Non-Profit
U.S. Postage
Paid
Joppa, MD 21085
Permit No. 14

CBRNIAC
Chemical, Biological, Radiological & Nuclear Defense
Information Analysis Center

The focal point for DoD Chemical, Biological, Radiological and Nuclear (CBRN) Defense scientific and technical information